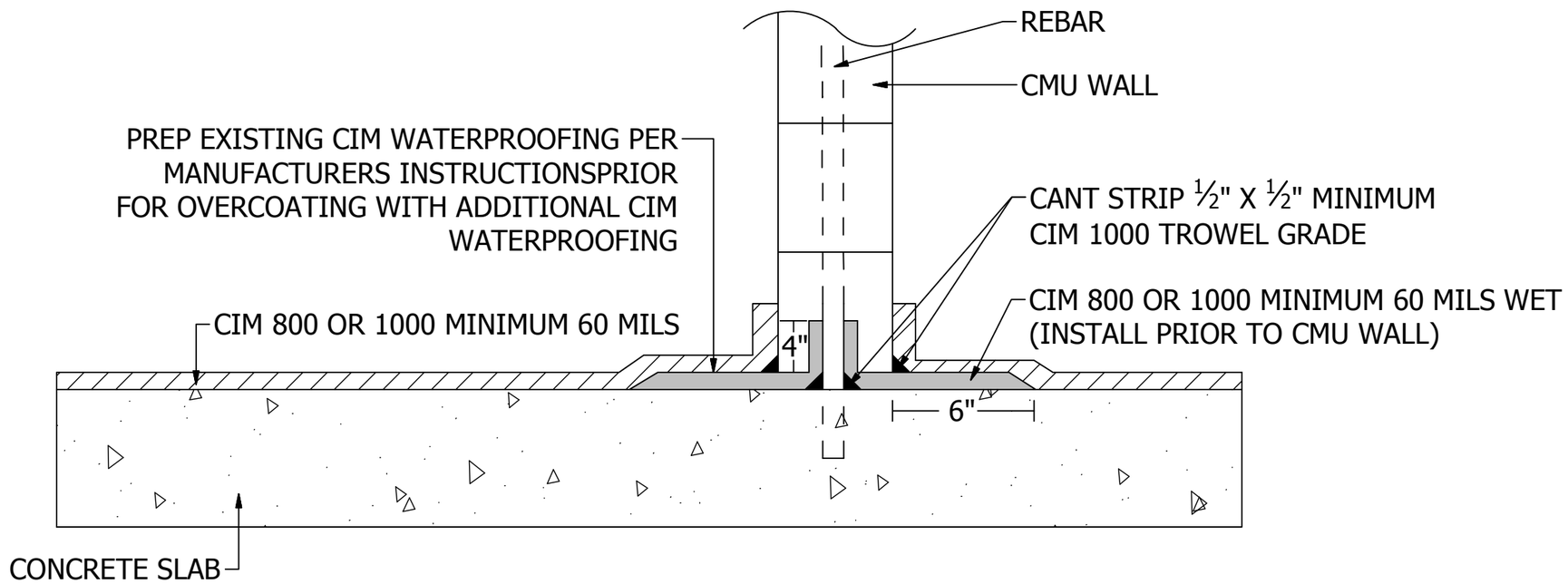

NOTES: 1. (OPTIONAL/NOT SHOWN) PRIME CONCRETE AND CMU WALL WITH CIM 61TN OR CIM EMT EPOXY PRIMER.
2. REBAR MUST BE ABRADED AND APPLY CIM VOC COMPLIANT BONDING AGENT TO EXPOSED METAL.
3. CIM MAY BE APPLIED AT THICKNESSES GREATER THAN 60 MILS. CONTACT CIM FOR INFORMATION ON EXTENDED WARRANTIES.

C.I.M. Industries Inc. | THE ORIGINAL 4EvaSeal IS THE SOLUTION | CHASE Corporation We make a material difference

TITLE

CONCRETE DECK TO CMU WALL WATERPROOFING

SIZE		DWG NO	REV
		CIM-C0013	
SCALE NONE		SHEET 1 OF 1	